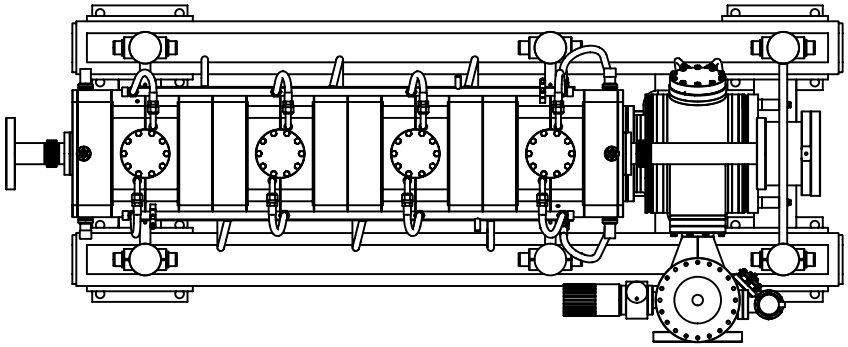

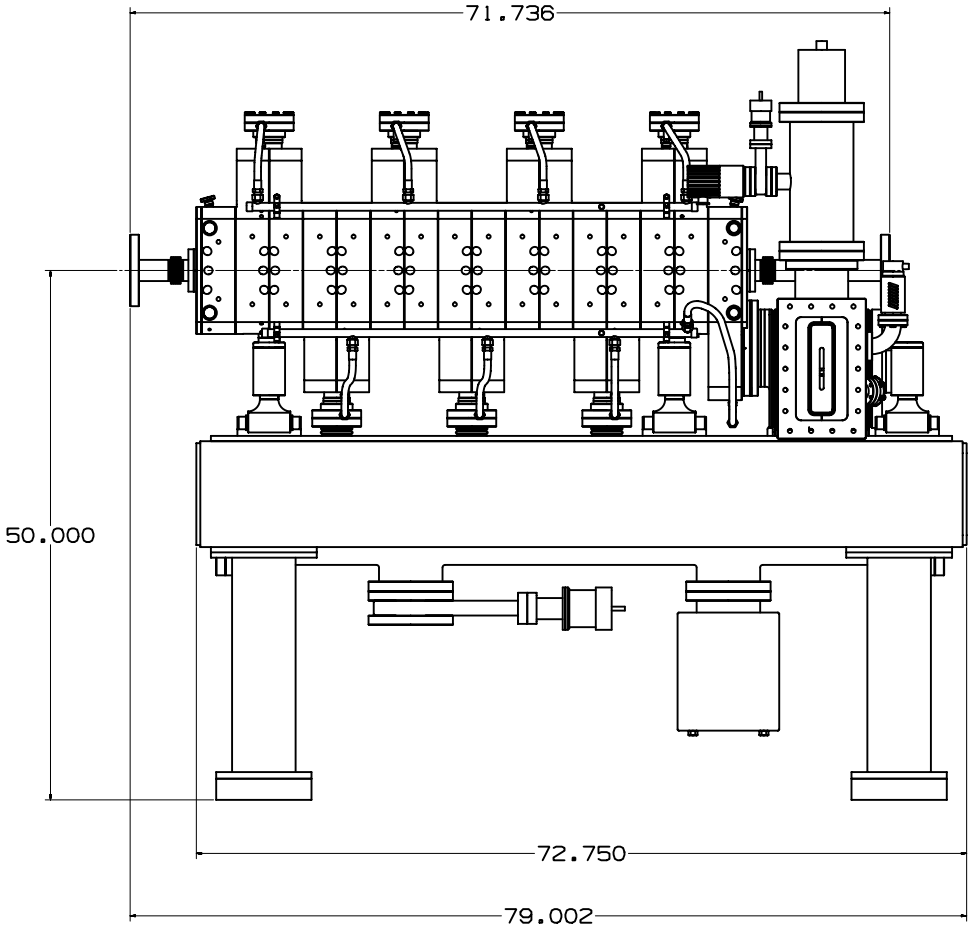

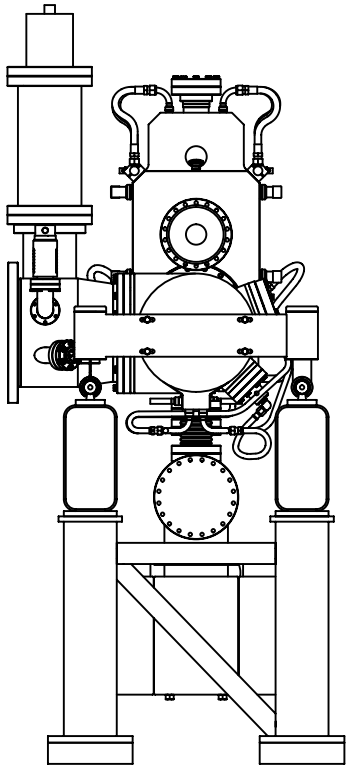

PRELIMINARY
FOR INFORMATION OR REVIEW ONLY. DO NOT USE FOR PROCUREMENT OR FABRICATION. DRAWING CONTENT SUBJECT TO FUTURE CHANGE.

SNS DWG No. XXXXXXXXX-XXX-XXXX-XXXX-XXX

Los Alamos
Los Alamos National Laboratory
Los Alamos, New Mexico 87545
SNS DIVISION

PROJECT: SNS

FOR CONTRACTOR

SIZE	CAGE CODE	DWG No.	REV
E	89516	153Y------	-A

SCALE 1/4 DO NOT SCALE SHEET 1 OF 3